Suggested Discus/Hammer Cage
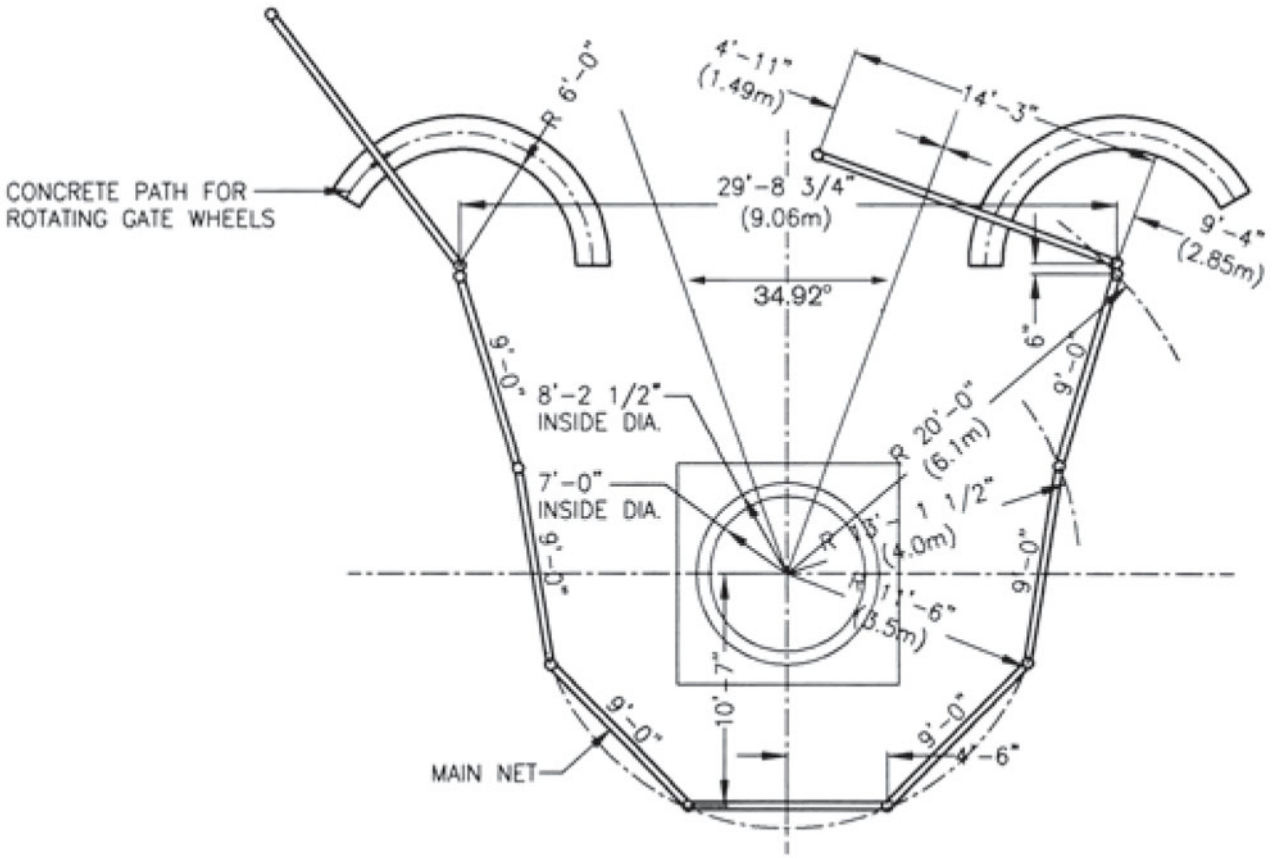
Pioneer®
"The Striping People"®
4529 Industrial Parkway
Cleveland, Ohio 44135
Phone: (800) 877-1500
Fax: (800) 877-1511
www.pioneerathletics.com